5th CATEGORY – HISTORIC RACING

GROUP Nc

APPROVED VEHICLE INFORMATION SHEET

This form details information about the vehicle identified below, which is a model in the 5th Category Historic Cars group.

To be issued with a Historic Log Book, cars need to comply with the specifications, the physical appearance shown in the illustrations and the general historic rules as detailed in the current Motorsport Australia Manual of Motor Sport.

Make of Car	Ford
Model	Falcon XR GT
Period of Original Manufacture	1966 to 1968
CAMS Historic Group	Nc – (NcC)
Date of issue of this document	September 2021

This information sheet is a compilation of relevant extracts from the documentation listed below:

Note that for Historics, all the documents listed must be examined together.

Historic

- Historic Equipment Chart
- 2020 Motorsport Manual – Specifications of Automobiles – 5th Category – Historic Cars – General Regulations
- 2020 Motorsport Manual – Specifications of Automobiles – 5th Category – Historic Cars – Events

Vehicle Eligibility

- 2020 Motorsport Manual – Specifications of Automobiles – 5th Category – Historic Cars – Vehicle Eligibility – General Requirements
- 2020 Motorsport Manual – Specifications of Automobiles – 5th Category – Historic Cars – Group A, C, N, & U – Touring Cars
- 2020 Motorsport Manual – Specifications of Automobiles – 5th Category – Historic - SEATS FOR GROUPS NA, NB, NC, SA, SB AND SC
- 2020 Motorsport Manual – Specifications of Automobiles – 5th Category – Historic Cars Approved Tyre List: Group N & S
- Equipment Standards and Guidelines
- 2020 Motorsport Manual – Vehicle Eligibility – 5th Category – Historic – Component Substitution Criteria
- 2020 Motorsport Manual – Vehicle Eligibility – 5th Category – Historic – Equipment Standards and Guidelines (Safety Cages/Roll Bars)
- 2020 Motorsport Manual – Vehicle Eligibility – 5th Category – Historic – Equipment Standards and Guidelines (Firewalls, Scattershields & Chainguards)
- Group N Specifications

Equipment Standards and Guidelines

General Requirements for Cars and Drivers

- 2020 Motorsport Manual – General Requirements for Cars and Drivers – Definitions – Technical
- 2020 Motorsport Manual – Classification of Automobiles
- 2020 Motorsport Manual – General Requirements for Cars and Drivers – Schedule A, Schedule B
- 2020 Motorsport Manual – General Requirements for Cars and Drivers – Schedule C
- 2020 Motorsport Manual – General Requirements for Cars and Drivers – Schedule D: Apparel
- 2020 Motorsport Manual – General Requirements for Cars and Drivers – Schedule E – Wheels and Tyres
- 2020 Motorsport Manual – General Requirements for Cars and Drivers – Schedule F: Aerofoils
- 2020 Motorsport Manual – General Requirements for Cars and Drivers – Schedule G - Fuel
- 2020 Motorsport Manual – General Requirements for Cars and Drivers – Schedule H – Fire Extinguishers
- 2020 Motorsport Manual – General Requirements for Cars and Drivers - Schedule I: Safety Harness & Window Nets
- 2020 Motorsport Manual – General Requirements for Cars and Drivers – Schedule J – Safety Cage Structures
- 2020 Motorsport Manual – General Requirements for Cars and Drivers – Schedule K – Markings on Automobiles
- 2020 Motorsport Manual – General Requirements for Cars and Drivers – Schedule L: Automobile Log Books
- 2020 Motorsport Manual – General Requirements for Cars and Drivers – Schedule M: Scatter Shields
- 2020 Motorsport Manual – General Requirements for Cars and Drivers Schedule N - Fuel Tanks & Refuelling

Contents

Section 1. Chassis....1
Section 1.1. Chassis Frame....1
Section 1.2. Dimensions....1
Section 2. Bodywork....1
Section 3. Bonnet....3
Section 4. Windscreen....3
Section 5. Mirrors....4
Section 6. Suspension....4
Section 6.1. Front Suspension....4
Section 6.2. Rear suspension....5
Section 7. Steering....6
Section 8. Wheels and Tyres....6
Section 9. Brakes....7
Section 10. Engine....8
Section 10.1. Specifications....8
Section 10.2. Cylinder Head....10
Section 10.3. Exhaust....12
Section 11. Starter Motors....12
Section 12. Lubrication system....12
Section 13. Ignition system....13
Section 14. Cooling system....14
Section 15. Fuel....14
Section 15.1. Fuel system....15
Section 15.2. Fuel Tanks....16
Section 15.3. Fuel pump and lines....16
Section 15.4. Bulkhead....16
Section 16. Carburettor....17
Section 16.1. Throttle linkage....17
Section 17. Inlet manifold....17
Section 18. Transmission....17
Section 18.1. Clutch....17
Section 18.2. Gearbox....18
Section 18.3. Final drive....18
Section 18.4. Differential....18
Section 18.5. Transmission shafts (exposed)....19
Section 19. Electrical System....19
Section 20. Mandatory Identification/Markings....20
Section 21. Roll cage/Safety cage....21
Section 22. Safety Harnesses....22

Section 23. Frontal Head Restraint 24
Section 24. Window Nets 30
Section 25. Rain Lights 30
Section 26. Seats 31
Section 27. Interior 33
Section 28. Steering Wheel 33
Section 29. Instruments and Switches 33
Section 30. Gearchange light/Shift light 33
Section 31. Engine revolution speed limiter 33
Section 32. Heaters 34
Section 33. Fire Extinguisher 34
Section 34. Towing Point 35

Section 1. Chassis

Section 1.1. Chassis Frame

Description	Uni-body four door sedan
Period of Manufacture	1966-1968
Manufacturer	Ford Motor Company
Chassis Number from	JG33XXXXXXX
Chassis number location	Radiator support panel, front upper left & id plate on the radiator Support panel. Original engine number stamped into left suspension Tower.
Material	Steel
	Also refer to Chassis/Bodywork

Section 1.2. Dimensions

	Front	**Rear**
Track	1473 mm	1473mm
	Also refer to Track The distance between the centres of the contact patches of the tyres on the same axle as presented for competition.	
Wheelbase	2827 mm Refer Chassis/Bodywork – page 3. The original wheelbase dimensions must be retained.	
Overall length	4689 mm	
Dry weight	1048kg	

Section 2. Bodywork

Definitions **Touring cars**	Refer Chassis/Bodywork – page 3. The bodywork and body fittings must be as supplied by the manufacturer. Chassis or chassis-body unit, including the floorpan, must be original and unmodified, save for the strengthening techniques provided for under the Group N general regulations. The original wheelbase dimensions must be retained. The track dimension for all Groups are free save that the upper part of the tyre, down to the flange over the wheel hub centre must be within the perimeter of the vehicle when viewed vertically from above (see diagram 1). 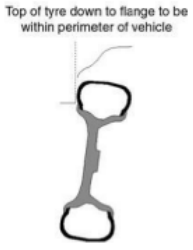
Type	Sedan
Material	Steel
Number of seats	Five
Number of doors	Four
Spoilers	Nil
Bumper bars	Refer Chassis/Bodywork – page 3. Bumper bars must be retained.

Mudguard flares/extensions	Refer Mudguards flares/extensions – pages 2 and 12 Flares and/or extensions to the guards are not permitted unless originally fitted by the manufacturer. Mudguard flares/extensions – flares and/or extensions to the guards are not permitted unless originally fitted to the make and model in question by the manufacturer.
Wheel opening	Refer Mudguards flares/extensions – page 12 The inner lip of the wheel opening may be folded back for tyre clearance.
Seam welding	Refer Seam welding – page 3. It is permitted to seam weld the body. Save for underneath the vehicle, seam welding must not be visible externally on the exterior of the vehicle
Safety	Refer Safety – page 2. Vehicles in all historic groups, while competing in competitions specifically limited to such vehicles and mixed category single-car speed competitions, are exempted from normal Motorsport Australia requirements in respect of bodywork.
Undertrays/fairings	Refer Undertrays/fairings – page 3. The use of undertrays, fairings etc, designed to improve the aerodynamic form of the automobile shall not be permissible unless supplied as standard equipment.
Strut Braces	Refer Strut Braces – page 3 Strut braces solely between the front strut/shock absorber towers are permitted save for those vehicles with alternative bracing structures as standard, strut braces solely between the front strut/shock absorber towers are permitted. The fitment of strut braces should ideally be by the manufacturer's original fixtures, however, the welding or bolting of additional lugs to the body (e.g. inner guard or strut tower) for the purpose of mounting the strut brace is permissible. The strut brace itself must be attached by bolts, and must be removable.
Strengthening	Refer Strut Braces – page 3 Minor strengthening by the addition of sheetmetal is permitted provided such strengthening follows the contour of the bodyshell. The sheetmetal being added must be of the same gauge/thickness as of the parent material.
Additional control arms	Also refer to Suspension – page 13. Additional control arms may be fitted front and rear but in doing so, the original components must remain functional. The method of mounting is free, including the use of spherical or rose-type joints, providing all such control arms remain outside the original bodywork.
Sound deadener	Refer Sound deadener – page 3 Sound deadener (bitumen and fabric types) may be removed from the body shell and hung components
Fiberglass	Refer to Equipment. Permitted only where used on the particular vehicle in the period.
Alteration	Refer Suspension – page 10 the body may not be altered to incorporate any system facilitating the adjustment of the ride height.
Nuts and Bolts	Refer Nuts and Bolts – page 3 Nuts and bolts may be locked; nuts, bolts, screws, washers, clips and gaskets may be replaced with non original items. In the case of nuts and bolts these may be larger replacements, captive nuts, lock nuts etc. Refer also to Equipment - Permitted – twelve point nuts, and Phillips head screws.
Quick release type fasteners	Refer Nuts and Bolts – page 3

	quick release type fasteners are specifically prohibited.
Free	Refer Free – page 2 A component, deemed to be free under these regulations may, where fitted to the vehicle as standard, be removed or replaced. Where the removed component is replaced, the replacement is not restricted in design or material (unless otherwise specified) providing it performs only the same function. No modification may be made to surrounding components or bodywork to which the replacement is fitted, unless otherwise permitted. Where freedom is granted for the fitment of any component, such freedom is restricted to that component and such modifications to enable fitment of it, but is limited to the following: holes may be drilled for fasteners, e.g., bolts, screws, rivets etc. Holes of the minimum dimensions necessary for the passage of wiring and fuel, brake, and oil lines/hoses are permitted. For the purpose of this article, a component shall be deemed to include all other components with which it is integral, or to which it is attached by means the manufacturer intended to be permanent. Where a system is deemed as free, all components solely associated with that system are regarded as free, as per above.

Section 3. Bonnet

	Refer to Body shell - page 1. Components such as doors, bonnet, bootlid and mudguards which are readily demountable are not deemed to be part of the body shell.
Fastening systems	Refer to Schedule B - page 1. Each automobile in a circuit race shall, of necessity, also be required to be fitted with two separate fastening systems on any bonnet or other panel where the leading edge can be raised. The fastening systems shall meet the following requirements: (i) to be deemed separate, a fastening system shall continue to function if the second system is removed in its entirety; (ii) they shall be of adequate strength and limited elasticity and range of movement; (iii) they shall simultaneously hold the bonnet or panel closed or as an alternative for speed events only, one fastening system shall hold the bonnet or panel closed and its release shall allow the bonnet or panel to be raised to provide access to a second separate fastening system fitted within the automobile. The second fastening system shall prevent the bonnet or panel from being raised more than 150mm from the fully closed position.

Section 4. Windscreen

Windscreen	Refer Windscreen – page 2. A laminated windscreen is required in races and in multiple car speed events. However, in the event that a laminated screen is unavailable, approval may be given on individual application to Motorsport Australia for the fitment of a Lexan or Perspex windscreen.
Any glass windscreen Tint/colouring	Each automobile in a circuit race shall, of necessity, in addition to the provisions of Schedules A and B, be fitted only with laminated glass in any glass windscreen. Windows, including windscreens, shall not be coloured or tinted unless fitted as standard to a production automobile and compliant with AS2080; Refer Schedule A – Page 1. Each automobile shall, of necessity, in any competition, have any window or windscreen fitted made from a material which is clear or, if tinted, compliant with AS 2080;

Section 5. Mirrors

Requirement	Refer to Schedule C - page 1. Each automobile in a circuit race shall, of necessity, also be required to be fitted with not fewer than two functional rear vision mirrors each of at least 50cm².
Window nets	Refer Schedule I – Page 2. The net may be locally modified to preserve the driver's view of the external mirror.

Section 6. Suspension

Section 6.1. Front Suspension

Description	Independent, upper wishbone, lower arm with track rod. Also refer to Suspension. The original form and type of suspension only shall be employed (e.g., a semi-elliptic leaf spring suspended live rear axle may not be replaced by a coil spring suspended De Dion type, and so on).
Suspension points	Also refer to Suspension. Suspension pickup points may be moved by up to 30mm
Springs	
Medium	Coil
Type and location	Also refer to Suspension. Springs are free provided that the type and location are unchanged.
Ride Height	Also refer to Suspension. Adjustable ride height is permitted, save that the body may not be altered to incorporate any system facilitating the adjustment of the ride height.
Dampers	
Type	Telescopic
Adjustable	No. Also refer to Suspension. Shock absorbers are free, save that they may not utilise external gas/fluid reservoirs and/or canisters. Also refer to Shock Absorbers: Production Based Groups
Anti-Sway Bar	Fitted – mandatory. Adjustable.
	Also refer to Sway Bars. Sway bars may be fitted or removed from the front provided the sway bar does not perform any other function. Such sway bars must be of a conventional type, i.e., made of a solid steel bar bent to shape. The diameter of the sway bar is free. Hollow sway bars are not permitted. The method of mounting is free. The end links on bars may incorporate the use of spherical or rose type joints. Sway bars that perform more than one function can only be varied in diameter.
Suspension adjustable	Yes
Method	Caster, camber and toe, spring height
	Also refer to Suspension. A maximum of 5° static negative camber is permitted for wheels on the front axle.

Additional control arms	Also refer to Suspension – page 13. Additional control arms may be fitted front and rear but in doing so, the original components must remain functional. The method of mounting is free, including the use of spherical or rose-type joints, providing all such control arms remain outside the original bodywork. Where a vehicle is fitted with a Panhard rod as standard equipment, its mounting points may be moved without restriction, or it may be removed and replaced with a Watts linkage. Spherical rod ends may be employed in either application.
Uniballs	Refer Equipment. Permitted only where used on the particular vehicle in the period.

Section 6.2. Rear suspension

Description	Live axle. Also refer to Suspension. The original form and type of suspension only shall be employed (e.g., a semi-elliptic leaf spring suspended live rear axle may not be replaced by a coil spring suspended De Dion type, and so on).
Suspension points	Also refer to Suspension. Suspension pickup points may be moved by up to 30mm
Spring Medium	Leaf
Type and location	Also refer to Suspension. Springs are free provided that the type and location are unchanged.
Ride Height	Also refer to Suspension. Adjustable ride height is permitted, save that the body may not be altered to incorporate any system facilitating the adjustment of the ride height.
Rear axle camber	Refer Final Drive – page 5. Rear axle camber must be as per the manufacturer's specifications.
Housings	Refer Strengthening – page 3. Original axle housings as supplied by the vehicle manufacturer must be employed.
Housings **Strengthening**	Refer Strengthening – page 3. Strengthening and reinforcement of such rear axle housings, and the addition of bracketry for the attachment of rear axle locating arms is permitted.
Dampers	
Type	Telescopic
Adjustable	No. Also refer to Suspension. Shock absorbers are free, save that they may not utilise external gas/fluid reservoirs and/or canisters. Also refer to Shock Absorbers: Production Based Groups
Anti-Sway Bar	Yes. Adjustable. Also refer to Sway Bars. Sway bars may be fitted or removed from the rear provided the sway bar does not perform any other function. Such sway bars must be of a conventional type, i.e., made of a solid steel bar bent to shape. The diameter of the sway bar is free. Hollow sway bars are not permitted. The method of mounting is free. The end links on bars may incorporate the use of spherical or rose type joints. Sway bars that perform more than one function can only be varied in diameter.
	Also refer to Sway Bars
Suspension adjustable	Yes
Method	Spring height
Additional control arms	Also refer to Suspension.

	Additional control arms may be fitted front and rear but in doing so, the original components must remain functional. The method of mounting is free, including the use of spherical or rose-type joints, providing all such control arms remain outside the original bodywork. Where a vehicle is fitted with a Panhard rod as standard equipment, its mounting points may be moved without restriction, or it may be removed and replaced with a Watts linkage. Spherical rod ends may be employed in either application.
Uniballs	Refer Equipment. Permitted only where used on the particular vehicle in the period.

Section 7. Steering

	Also refer to Steering. The steering system employed for the year model in question, by the original manufacturer, must be utilised. Only Motorsport Australia approved alternative components may be used.
Type	Recirculating ball 16:1 box.
Make	Ford
Locking mechanism	Refer Schedule A – Page 1. Each automobile shall, of necessity, in any competition if manufactured prior to 1 January 1978 (or otherwise not complying with ADR25A) and not registered for use on public roads, have any steering column locking device removed or disabled.

Section 8. Wheels and Tyres

Wheel Type			
Original	Pressed disc		
Material			
Original	Steel		
Allowed	Aluminium		
Wheel diameter and rim width			
Fixture method	Stud and nut	**Nmbr of studs**	Five
Wheels	Refer to Wheels. Wheel diameter must be as originally supplied by the manufacturer or that which was deemed by Motorsport Australia to have been commonly used on the model in competition during the period as outlined in the vehicle's Specification Sheet Wheels may be replaced by period style alloy wheels. Also refer to Wheels. Wheel: flange and rim. Complete Wheel: flange, rim and tyre. For measurement the tyre shall be inflated to the tyre manufacturer's recommended pressure. Also refer to Wheel and Tyres Wheels are required to be original in diameter and style.		
	Front	**Rear**	
Original	5.5" x 14"	5.5" x 14"	
Allowed	8" x 15"	8" x 15"	
Wheel spacers	Allowed – refer to Wheel spacers. A maximum of one metallic spacer may be used behind each wheel.		
Wheel opening	Refer Mudguards flares/extensions – page 12 The inner lip of the wheel opening may be folded back for tyre clearance.		
Tyres	Refer to Wheels and Tyres Tread wear indicators as provided by the tyre manufacturer shall be the definitive indicator of tread depth.		

	Prior to practice or racing, each tyre must have tread in excess of the wear indicator save on the shoulder where localised wear may occur. Refer to Tyres. Re-grooving of tyres is not permitted. The upper part of the tyre, down to the wheel rim flange over the wheel hub centre must be within the perimeter of the vehicle when viewed vertically from above. 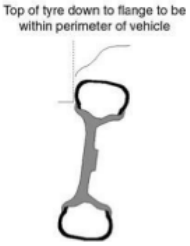 Tyres must be of approved type radial or cross-ply construction with a 60% minimum aspect ratio. Refer to Approved Tyre List
Valve Caps	Also refer to Wheels and Tyres. Each tyre valve shall be fitted with a cap which effectively prevents leakage in use.

Section 9. Brakes

Description	Refer to Brakes. The original form and type of braking system shall be employed.	
	Front	**Rear**
Type	Disc	Drum
Dimensions	279.4 mm	254 mm x 45 mm diameter
Material	Cast iron	Cast iron
Nmbr cylinders/pots per wheel	One	One
Actuation	Hydraulic	Hydraulic
Caliper make	Kelsey Hayes Ford single piston	
Caliper type	Floating	
Caliper material	Cast iron	
Master Cylinder make	PBR	
Type	Tandem	
Adjustable bias	None	
Servo fitted	Yes	
Definition **Friction surface/swept area**	Also refer to Friction surface of the Brakes – page 3. Surface swept by the linings on the drum, or the pads on both sides of the disc, when the wheel achieves a complete revolution.	
Components replacements	Refer to Brakes Components may be replaced with those from another make and model of production touring car that was produced before 31 December 1972, provided there is no increase in the swept area or diameter of the disc or drum. Machining of the rotor is permitted. The replacement of original disc rotor assemblies with those of two or three-piece construction of a similar appearance is permitted. Original **hubs** must be retained, machining is permitted. Any adaptor between hub and disc rotor must be solid and be of aluminium or steel.	
Dimension tolerance	Refer to Brakes	

	The major brake dimensions of drum brakes (i.e., internal drum diameter and width) shall be as supplied as original equipment with a **tolerance** of 3mm permitted on drum diameter. Drum brakes may not be replaced by disc brakes.
Lining Materials	Refer to Brakes Disc pad and drum brake lining **materials** are free.
Backing plates	Refer to Brakes **Backing plates** may be ventilated and/ or fitted with cooling ducts.
Master cylinders	Refer to Brakes Dual or tandem master cylinders may be fitted.
Operation	Refer to Brakes Mechanical operation may be converted to hydraulic operation.
Brake dust/stone shields	Refer to Brakes Disk brake **dust/stone shields** may be removed.
Brake discs	Refer to Brakes Machining of the rotor is permitted. Disc brakes may not be **grooved or drilled**. Disk brake **dust/stone shields** may be removed. It is permissible to replace **brake discs** with items that are wider than the original component. Discs replaced under this provision may incorporate ventilation between the braking surfaces.
Twin leading shoe brakes	Permitted. Refer Equipment
Cooling ducts	Refer to Brakes It is permitted to fit **front brake cooling ducts** to a maximum width of 300mm on each side save that the total combined width of the duct/s is 300mm on each side of the front of the vehicle. **Brake cooling ducts** may be fitted. If brake cooling ducts or scoops are fitted, they must be separated by a minimum of 300mm, so as not to form an aerodynamic aid and their sole function shall be to assist in the supply of air to the brakes.
Park brake system	Refer to Brakes It is permitted to render the foot and/or hand operated park brake systems inoperative whilst retaining the operating mechanism in its original position.
Adaptor plates	Refer to Brakes The use of **adaptor plates** for the attachment of brake calipers or intermediate spacers within brake calipers to accommodate variations in rotor and brake pad thickness is permitted.
Pedal boxes	Refer to Brakes Non-standard **pedal boxes** are permitted provided the original pedal location & configuration is maintained i.e.; where the pedals are pendulum or floor mounted, they must retain this configuration.
Brake bias	Refer to Brakes It is not permitted for **brake bias** to be adjustable by the driver when in the normal driving position.
Brake hoses	Refer to Brakes Brake hoses are free.
Brake lines **Braided**	Refer to Equipment. Permitted.

Section 10. Engine

Section 10.1. Specifications

Description	Refer to Engine. Engine: the original type and design of the cylinder block as originally used in the make, model and year of the vehicle in

	question or a Motorsport Australia-approved alternative must be employed. Ford M-6010-BOSS 302 block with a rev limit of 7500rpm as a replacement for the Windsor 289 block is approved for use. Logbook endorsed and the engine sealed required. Internal engine components (e.g., pistons, piston rings, connecting rods, crankshaft, bearings and gaskets) are free, subject to relevant bore and stroke restrictions. Main bearing cap supports or girdles may be used. The engine block may be "sleeved" to achieve the correct bore dimensions.
Make	Ford
Model	289
Nmbr of cylinders	Eight
Configuration	Vee
Cylinder block material	Cast Iron Also refer to Cylinder Block. The crankcase and the cylinders.
Two/Four Stroke	Four
Bore – original	101.6 mm
Maximum allowed	103.1 mm Refer to Engine. The bore may be increased by a maximum of 1.5mm, and the stroke must remain standard as specified for the make and model. Where increasing the bore size up to 1.5mm increases the engine cubic capacity above the original capacity class limit, for competition purposes the vehicle will remain within its original cubic capacity class.
Stroke - original	72.898 mm
Capacity	Also refer to Cylinder Capacity. Volume V generated in cylinder (or cylinders) by the upward or downward movement of the piston(s). $V = 0.7854 \times b^2 \times s \times n$ where: b = bore s = stroke n = number of cylinders
original	3298 cc
Maximum allowed	4869 cc
Cooling method	Liquid
Identifying marks	Tag attached to engine
Comments	Ford M-6010-BOSS 302 block with a rev limit of 7500rpm as a replacement for the Windsor 289 block is approved for use. Logbook endorsed and the engine sealed required.
Internal engine components	Refer to Engine. Internal engine components (e.g., pistons, piston rings, connecting rods, crankshaft, bearings and gaskets) are free, subject to relevant bore and stroke restrictions. Main bearing cap supports or girdles may be used. The engine block may be "sleeved" to achieve the correct bore dimensions.
Bore and stroke	Refer to Engine. The engine block may be "sleeved" to achieve the correct bore dimensions. The bore may be increased by a maximum of 1.5mm, and the stroke must remain standard as specified for the make and model. Where increasing the bore size up to 1.5mm increases the engine cubic capacity above the original capacity class limit, for competition purposes the vehicle will remain within its original cubic capacity class.

Belts and pulleys	Refer to Engine. Toothed belts driving engine ancillaries are permitted. Engine pulleys are free. Note: Save that the original type of drive belt must be retained, engine pulleys are free.
Camshafts	Refer to Engine. Save that the original number and location must be retained, camshafts are free.
Engine mountings	Refer to Engine – page 5. The engine mountings may be replaced by components of alternative design provided that the engine remains in the original position in relation to the body/chassis with a tolerance of ± 8mm.
Roller rockers	Permitted. Refer Equipment.
Flywheel	Refer page 5 - Transmission. The flywheel must be of the original diameter, as determined by the ring gear, but is otherwise free.

Section 10.2. Cylinder Head

Description	Refer to Engine. The original type and design of cylinder head casting as originally used in the make, model and year of the vehicle in question, or a Motorsport Australia-approved alternative must be employed.		
Make	Ford		
Nmbr of valves per cylinder	Two	**Inlet**	**Exhaust**
		One	One
Nmbr of ports total	Eight	Inlet	Exhaust
		Four	Four
Nmbr of camshafts	One		
Location	Block		
Drive	Chain		
Valve actuation	Pushrod & rocker		
Spark plugs per cylinder	One		
Identifying marks	289 cast into heads adjacent to rocker stud boss.		
Comments	Aftermarket cylinder head use is allowed upon individual application. Approved cast iron cylinder heads are: • Dart Iron Eagle No. 1330008, • RHS Pro Action Small Block Ford No. 35305 • World Products Windsor Junior. The heads are to be in the manufactured state, save for refacing the cylinder gasket face and matching the inlet ports by not more than 12mm from the port face. Sealing procedures for engines using the substitute cylinder head is at the end of the specification sheet. Dart Iron eagle require the use of a MSD Soft Touch rev limiter Part No 8728 with a 7500 RPM limit. The limiter will be subject to testing at race meetings. Once approved, endorsement and the engine seal numbers will be recorded in the logbook. When install you must include an MSD Soft Touch rev limiter Part No 8728 that controls the engine to a maximum of 7500 RPM. This rev limiter must be mounted in a visible, easily accessible position in the engine bay. The operation of this MSD Soft Touch rev limiter will be subject to tests at race meetings.		
Modifications	Refer to Engine.		

	Cylinder head/s may be modified provided such modification is effected only by the removal of metal. Variation in combustion chamber or port design by the addition of material attached by welding, bonding or mechanical fastening systems is not allowed. Welding as required to reclaim damaged cylinder heads is permitted. The insertion or replacement of valve seat inserts is permitted. Cylinder head components not forming part of the cylinder head casting are free.
Approved Substitute Cylinder Head	Approved cast iron cylinder heads are: • Dart Iron Eagle No. 1330008, • RHS Pro Action Small Block Ford No. 35305 • World Products Windsor Junior. Subject to the heads being in the manufactured state, save for refacing of the cylinder gasket face and matching of the inlet ports by not more that 12mm from the port face. **Allowances** 1. Surfacing of the head face is allowed to achieve required combustion chamber volume or restore the cylinder head from engine failure damage and/or overheating. 2. K Line .030" bronze valve guide inserts are allowed if required and to recondition to standard size from excessive wear. 3. Port match inlet and exhaust ports to manifold to a maximum of the allowed depth from the manifold face. Inlet and exhaust ports must be left completely untouched from under the valve seats to within allowed depth from the manifold face. Machining is allowed of the valve spring pad and valve guide outside diameter and length as well as pushrod holes. This will enable spring locators, valve springs, stem seals, valve spring installation height and pushrod clearance to be correctly set up and fitted. 4. Valve seat cutting/grinding is allowed, but the original valve sizes of inlet and exhaust must be retained. No machining is permitted under the valve seat. 5. No machining is permitted in the combustion chamber. Combustion chambers must be left completely untouched except for original machining by the manufacturer. i.e. No machining, no hard or soft wire brushing, no coarse or fine grinding either by hand, machine or high-speed grinder etc, no shot peening, no sand blasting, no glass bead blasting, no water blasting, no hand scraping, no filing, no emery wheels or stones, no acid etching, no chiselling, no hammering or pneumatic peening, no flexi honing, no spark eroding, no removal of any metal by milling machine. 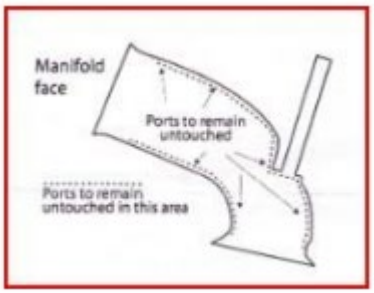
Sealing procedure for engines with substitute heads	a. Engine to be assemble to short motor without sump. b. Heads to be assembled ready to be fitted to engine. c. 2 sump bolts/studs to be drilled. 2 top timing case bolts/studs to be drilled. d. The sealer will pick two valves from one cylinder of either head to be removed to check that under the valve head and the ports are

	unmodified and that the valve heads are of the correct diameter for the inlet, and exhaust. e. Check the inlet and exhaust ports are unmodified except for the allowance allowed, from the manifold faces, into the port for manifold alignment. f. Combustion chambers are to be as per above. g. Measure bore and stroke. h. Note whether 2 bolt or 4 bolt block. i. Fit sump and fit seal. Seal timing case. j. Fit heads and drill holes in appropriate positions in the corners of the block and heads to enable wire and seals to be fitted. k. Seal heads to block. Note seal numbers. Competitor gets a signed sealers document. Note: If the heads are removed, they must be re-sealed following the above points 4, 5, 10 and 11.

Section 10.3. Exhaust

Exhaust	Refer to Exhaust. The exhaust system should be of a type compatible with the period, and must comply with the requirements of Schedule B, but is otherwise free.
Outlets	Refer to Schedule A and B. Each automobile shall, of necessity, in any speed event or race be fitted with sideways or rearward-facing exhaust outlets. If rearwards, the outlet/s shall be between 100mm and 450mm above the ground and shall not protrude more than 150mm beyond the rearmost portion of the automobile. If directed sideways, the outlet/s must be located rearward of the midpoint of the wheelbase. In any case, they shall not project beyond the maximum width of coachwork or terminate more than 50mm within the plan view of the adjacent coachwork; be configured such that the sound emitted when measured 30m from the track edge does not exceed 95dB(A) unless event regulations set a lower limit;
Noise limit	Refer to Schedule A and B. Each automobile shall, of necessity, in any speed event or race be configured such that the sound emitted when measured 30m from the track edge does not exceed **95dB(A)** unless event regulations set a lower limit;

Section 11. Starter Motors

Requirement	Refer Safety – Pages 2 and 3. Vehicles in all historic groups, while competing in competitions specifically limited to such vehicles and mixed category single-car speed competitions, are exempted from normal Motorsport Australia requirements in respect of starter motors. Refer Electrical – Page 1. A self-starter in proper working order fitted to the vehicle is obligatory, and none of its parts may be removed during the event. Refer Equipment – Production Based Groups The following components are acceptable on all vehicles within the various groups listed regardless of the original equipment fitted to individual vehicles - Geared starters

Section 12. Lubrication system

Method	Wet sump
Oil cooler standard	No
Comment	External oil line to the main bearings fitted in some early versions.

Description	Refer to Lubrication system. – page 5 The original lubrication system supplied by the manufacturer must be employed, save that oil pumps may be replaced or modified to enable higher pressure and/or volume, and additional external oil lines to original or approved components may also be employed.
Oil pumps	Refer to Lubrication system– page 5. oil pumps may be replaced or modified to enable higher pressure and/or volume, and additional external oil lines to original or approved components may also be employed. Any replacement oil pump must work on the manufacturer's original principle.
Sumps	Refer to Lubrication system– page 5. Sumps as supplied as original equipment for the model in question may be modified to incorporate baffles and/or increased capacity.
Oil Coolers/Oil filters	Refer to Lubrication system– page 5. Oil coolers and remote oil filters are permitted, but the bodywork must not be altered for the purpose of fitment, nor may they be fitted outside the confines of the standard bodywork.
Dry sump	Refer to Lubrication system– page 5. Dry sump lubrication systems are not permitted, unless originally fitted.
Oil accumulators	Refer to Lubrication system– page 5. Remote pressurised oil accumulators are permitted, conditional on them being used in conjunction with a normal wet-sump oil system, and serving no other purpose. The capacity of the accumulator must not exceed three litres. Refer to Equipment. Accusump oil system permitted.
Oil lines **Braided**	Refer to Equipment. Permitted.

Section 13. Ignition system

Type	Points, coil & distributor
Original Make	Autolite
Transistorised ignition	Refer to Electronic Components Not permitted.
CDI ignition	Refer to Electronic Components Not permitted.
Electronic ignition (breakerless)	Refer to Electronic Components Permitted.
Electronic coils (square)	Refer to Equipment. Permitted.
Definitions **Electronic ignition**	Refer to Technical definitions. An ignition system relying on electronic triggering of the spark timing, which does not use mechanical contact points as the spark trigger.
Definitions **Transistorised ignition**	Refer to Technical definitions. An ignition system using conventional contact breaker points but which has a transistorised spark discharge enhancement, e.g. capacitor discharge ignition.
Description	Refer to Ignition. Ignition must be of the same type, but not necessarily brand, as supplied by the manufacturer. Breaker type distributors must remain so configured, but may otherwise be modified. May be of the same type, but not necessarily brand as supplied by the manufacturer for the make and model concerned.
Breaker points/condenser	Refer to Ignition.

	Contact breaker points and condenser may be removed and their standard operations performed by electronic components providing the following conditions are adhered to: i. All components, save for the coil, shall be an integral part of the distributor. i. A maximum of two wires shall connect the low tension side of the distributor to the coil. These wires shall be visibly continuous and not contain any supplementary connection to any other component. Permitted is the fitment of an uninsulated earthing conductor between distributor body and cylinder block. i. Ignition advance shall be restricted to mechanical actuation within the distributor.

Section 14. Cooling system

Method	Liquid
Radiator	Refer to Cooling. – page 5 The radiator may be replaced but must retain its original location, form and function. The support panel opening may not be modified. The material from which the radiator may be manufactured is free.
Braided water lines	Refer Equipment. Not permitted
Electric Fans	Refer Electric Fans. Electric fans may be added, provided that no part of the fan assembly is visible from the outside of the vehicle.

Section 15. Fuel

Definitions **Fuel**	Refer General – Page 1 All fuel used in competition must comply with the prescriptions of this Schedule. All fuel must be used without additives other than those permitted herein. Other than for pump fuel, the mixing of fuels from different oil companies, or of different grades and/or types of fuel from the same oil company is forbidden. Refer Fuel – Pages 4 and 5. Only fuel as defined by Motorsport Australia must be used with reference to Motorsport Australia Manual Schedule G - Fuel, or as otherwise defined within these regulations. All fuel used in competition must comply with the prescriptions of Motorsport Australia Manual, Schedule G – Fuel unless otherwise defined within these regulations. Other than for pump fuel, the mixing of fuels from different oil companies, or of different grades and/or types of fuel from the same oil company is forbidden. 5th Category vehicles may be subject to fuel testing as outlined in Schedule G but need not be equipped with specific systems to enable the drawing of fuel samples. Any sampling shall be undertaken with due regard to safety. (v) Fuel Additive A Fuel Additive is any additive which is commercially available in Australia and is distributed for the purpose of being added to a fuel to provide additional lubrication to the fuel or to effect the specification of the fuel (such as the Research Octane Number [RON]).
Definition **Fuel additives**	Refer Fuel – Page 5. All fuel must be used without additives other than those permitted in Schedule G or otherwise as defined within these regulations. Fuel Additive

	A Fuel Additive is any additive which is commercially available in Australia and is distributed for the purpose of being added to a fuel to provide additional lubrication to the fuel or to effect the specification of the fuel (such as the Research Octane Number [RON]).
Fuel **Leaded**	Refer General – Page 1 It is not permitted to use a fuel of any type that contains lead in any form. Refer Fuel – Pages 4 and 5. Leaded Fuel is not permitted for use in any Motorsport.
Fuel **Permitted fuel**	 Refer Permitted Fuel and Additives – Pages 4 and 5 **Unleaded Racing Fuel** An Unleaded Racing Fuel with a maximum Ethanol content of 30% which is commercially available in Australia and distributed by a Fuel Supplier and which complies with the Fuel Standards Determinations made under the Australian Fuel Quality Standards Act. **Pump Fuel** A Commercial Fuel, with a maximum ethanol content of 10% - In accordance with Motorsport Australia Manual, Schedule G – Fuel. **Ethanol Blended Fuel** Ethanol Blended Fuel is defined as only containing the following constituents: (a) Anhydrous fuel grade ethanol (between 70% and 85% ± 5% v/v) (b) Unleaded petrol (15% and 30% ± 5% v/v) (c) Corrosion inhibitor (optional) (d) Colouring dye (optional) (e) Other constituents (0.2% max v/v)
Fuel **Permitted additives**	Refer Fuel – Page 3. Only these additives are permitted: (i) Valvemaster®, (ii) Redline Lead Substitute®, (iii) Penrite Valve Shield®, (iv) PM 800 Fuel System Conditioner®, (v) Elf Millesim®.

Section 15.1. Fuel system

Tank location	Boot floor.
Original Capacity	62 litres
Fuel injection	Also refer to Induction. Fuel injection is not permitted, unless fitted as original equipment to the make, model and year concerned. In such circumstances only the type, make and model of fuel injection equipment as originally fitted may be used.
Filler caps	Refer Fuel Tanks and Fuel systems – page 6.

	All quick-release (Monza-type) fuel filler caps protruding outside the silhouette of the bodywork must be fitted with a secondary device to prevent accidental opening.
Safety valve	Refer Fuel Tanks and Fuel systems – page 6. It is recommended that all cars are fitted with a one-way safety valve in the filler neck as close as possible to the fuel tank.
Exemption **Fuel Cut-off switch**	Refer to Safety - page 2. Vehicles in all historic groups, while competing in competitions specifically limited to such vehicles and mixed category single-car speed competitions, are exempted from normal Motorsport Australia requirements in respect of fuel cut-off switches, other than an isolating device which is clearly marked.

Section 15.2. Fuel Tanks

Fuel Tank	Also refer to Fuel Tank Any container holding fuel likely to flow by any means whatsoever towards the main tank or the engine.
Fuel Tank	Refer to Fuel Tanks. The fitment of a foam-filled fuel tank, or a fuel tank of a safety type approved by the FIA to FT3 specifications, is highly recommended. It should be installed either (i) in the same location as the original fuel tank, whereupon the original tank may be removed; or (ii) (ii) as near as practicable to the retained original fuel tank. In this instance the original fuel tank must be fully drained of any liquid, cleaned and rendered totally fuel vapour free, any drain plug must be removed, and the tank must be adequately vented. The filler neck must be isolated to prevent accidental re-filling.
Venting	Refer Fuel Tanks and Fuel systems – page 6. All fuel tanks must be vented externally to the bodywork. Refer also Schedule A – Page 1 Each automobile shall, of necessity, in any competition have each fuel tank vented externally to the bodywork
Exemption	Refer to Safety - page 2. Vehicles in all historic groups, while competing in competitions specifically limited to such vehicles and mixed category single-car speed competitions, are exempted from normal Motorsport Australia requirements in respect of safety fuel tanks.

Section 15.3. Fuel pump and lines

Original Fuel pump type and location	Mechanical, on engine block and electrical.
Make	Ford
Fuel Pump **Solid state**	Refer to Electronic Components Permitted.
Fuel Pump **Electric**	Refer to Induction Mechanical fuel pumps may be replaced by electric fuel pumps.
Fuel lines **Braided**	Refer to Equipment Permitted.

Section 15.4. Bulkhead

Bulkhead	Refer to Schedule A and B. must be fitted with a bulkhead constructed from a flame - and liquid proof material. If the material is constructed from polycarbonate it shall be a minimum of 6mm thick. This bulkhead shall effectively seal the cockpit from the fuel tank and re-fuelling system.

Section 16. Carburettor

Original Carburettor make	Autolite
Model	4300-4v
Carburettor number	One
Size	
Carburettor **Type**	Refer to Induction. Carburettors available during the period and later models of carburettors which were available in the period are acceptable, provided that the outward appearance is the same. Refer SU Carburettors. Carburettors of a make, model and/or appearance not available in the period are not permitted.
Carburettor **Number and type**	Refer to Induction. Multiple carburettors may be fitted in the ratio of not more than one choke per cylinder. Throttle bore sizes are free. Internal modifications of carburettors are permitted. Carburettors of a make, model and/or appearance not available in the period are not permitted. Carburettors available during the period and later models of carburettors which were available in the period are acceptable, provided that the outward appearance is the same. Multiple carburettors may be fitted in the ratio of not more than one choke per cylinder. Throttle bore sizes are free. Internal modifications of carburettors are permitted.
Carburettor **Throttle bore sizes**	Refer to Induction. Throttle bore sizes are free.
Carburettor **Internal modifications**	Refer to Induction. Internal modifications of carburettors are permitted.

Section 16.1. Throttle linkage

Throttle Linkage	Refer to Schedule A and B. Each automobile shall, of necessity, in any speed event or race be fitted with a return mechanism which in the event of any throttle linkage or throttle system failure will close each throttle.

Section 17. Inlet manifold

Inlet manifold	Also refer to Induction. Inlet manifolds are free except that they must be of a type compatible with the period.

Section 18. Transmission

Section 18.1. Clutch

Make	Ford
Type	Diaphragm
Diameter	241.5 mm
Nmbr of plates	One
Actuation	Hydraulic Refer Transmission – pages 5 and 13 The clutch is free. The clutch and its method of actuation are free.
Measuring tolerances	Refer Measuring tolerances – page 4 All machining (except bore and stroke) including fan, crankshaft bearings, connecting rod bearings, valves, ports, carburettor, venturi, manifolds and clutch ± 0.2% Weight of flywheel, clutch, crankshaft, connecting rods and pistons: +7% - 0.3%

Section 18.2. Gearbox

Type	Synchromesh
Make	Ford Top loader
Nmbr of forward speeds	Four
Gearbox location	Behind engine
Gearchange type and location	Remote lever floor
Case material	Cast iron
Identifying marks	N/a
Transmission Gear ratios	Refer Transmission – page 5 The original type of gearbox as supplied by the manufacturer for the make and model concerned, assembled and operating as originally supplied by the manufacturer, shall be retained. The number of forward and reverse gear ratios may not be changed, however the use of alternate gear ratios is permitted. The gear lever may be modified but the original shift pattern must be retained. Refer Final Drive – page 5 The original type of final drive assembly, including the housing supplied by the manufacturer for the make, model and year concerned shall be employed. The final drive assembly may be subject to machining operations provided always that its origin is able to be established. The overall width of the differential assembly may not be altered from the original specification. The use of alternate ratios is permitted.
	Refer Transmission – page 5 The original type of gearbox as supplied by the manufacturer for the make and model concerned, assembled and operating as originally supplied by the manufacturer, shall be retained. The number of forward and reverse gear ratios may not be changed; however, the use of alternate gear ratios is permitted. The gear lever may be modified but the original shift pattern must be retained.

Section 18.3. Final drive

Make	Borg Warner
Model	8 inch
Type	Refer Final Drive – page 5 The original type of final drive assembly, including the housing supplied by the manufacturer for the make, model and year concerned shall be employed.
Wheel drive method	Rear
Ratios	3.00:1
Machining	Refer Final Drive – page 5 The final drive assembly may be subject to machining operations provided always that its origin is able to be established.

Section 18.4. Differential

Differential type	Refer Final Drive – page 5 The original type of final drive assembly, including the housing supplied by the manufacturer for the make, model and year concerned shall be employed. Refer Final Drive – page 13 Differentials may be modified internally to incorporate slip limiting or locking devices.
Ratios	Refer Final Drive – page 5 The use of alternate ratios is permitted.
Make	Borg Warner

Model	8 inch
Type	Live axle
Floating hubs	Modifications to incorporate floating hubs are permitted.
Machining	Refer Final Drive – page 5 The final drive assembly may be subject to machining operations provided always that its origin is able to be established.
Width	Refer Final Drive – page 5 The overall width of the differential assembly may not be altered from the original specification.
Comment	4 pinion carrier standard

Section 18.5. Transmission shafts (exposed)

Number	One
Description	Open tail shaft with twin uni joints. Steel
Fixed casing	Refer Schedule A – page 1 Each automobile shall, of necessity, in any competition, have any propeller shaft and universal joints, if passing through the cockpit, fitted in a fixed casing.
Protection	Refer Schedule A – page 2 Each automobile shall, of necessity, in any race event, be fitted with a device or devices that shall protect any longitudinal propeller shaft from striking the ground in the event of a component failure.
Replacement	Refer Final Drive – page 5 Tailshafts and yokes: may be replaced provided they are of a steel construction and must maintain the original configuration.

Section 19. Electrical System

Voltage	12
Generator or Alternator	Alternator
Definition	Refer Electrical – Page 6. All electrical equipment must be of period style and specification, save that a dynamo/generator may be replaced by an alternator. The component parts of a complete electric system, including generator, accumulator, warning. The electrical system, including lighting and warning apparatus, must be in working order at the start of the competition.
Original Battery location	Engine compartment RHF.
Battery **Location options**	Refer Electrical page 6. The battery may be relocated. If the battery is relocated, the battery must be either of dry cell construction or be fitted within a suitable container which will prevent spillage of battery acid outside the container. In all cases the battery must be securely attached to the vehicle and the terminals covered to prevent short circuits.
Battery **Location identification**	Refer Schedule A – page 2 Display a blue triangle of sides 150mm indicating the location of the battery. A battery fitted in the cockpit shall have an additional blue triangle not less than 60mm sides fitted on the cover of the battery or immediately adjacent to the battery if uncovered;
Isolation switches	Refer Safety page 3. All vehicles must be equipped with a Battery Isolation (Master) Switch which effectively isolates all electrical circuits from the battery and stops the engine. It should be capable of being operated by the seated driver. It is recommended that there be a second switch, or a remote means of operating the main switch, which can be operated from outside the vehicle. This should be positioned in the vicinity of the base of the A pillar on the driver's side. This external switch or

	remote activation must be clearly marked by a symbol showing a red spark in a white edged blue triangle. Also refer to Fuel Tanks and Fuel Systems – page 6. Fuel systems (electrical or mechanical) must have an isolating device which is clearly marked.
Spade terminals	Refer Equipment. Electrical spade terminals - Permitted
Fuse Box	Refer General – Page 2. A fuse box may be relocated to enable a safety cage structure to be fitted.

Section 20. Mandatory Identification/Markings

Competition Numbers	Refer Mandatory Identification – page 1. Refer General Requirements Refer Advertising/Signage – pages 6 and 7. Competition numbers shall be displayed in accordance with this Schedule and be clearly visible to the satisfaction of the Clerk of the Course. The location and size of competition numbers shall be an upper case "N" directly followed by a lower case "a", "b" or "c" (as appropriate) being black or white contrasting in colour to that of the bodywork, 100mm and 80mm in height respectively in typeset Helvetica Bold Condensed immediately following the vehicle's racing number at the bottom right hand corner, no further than 100mm from the border of the background. Refer Competition Numbers – Page 2 Competition numbers carried by 5th Category vehicles must comply with the requirements of Schedule K, article 2 (refer "General Requirements for Cars and Drivers") except as follows: (b) All 5th Category vehicles which have a disc or rectangular background to the competition number may carry either black numbers on a white background or white numbers on a black background.
Competition Numbers Exemptions	Refer Competition Numbers – Page 2 Applications for exemption from the requirements as to background specified in Schedule K (refer "General Requirements for Cars and Drivers") and/or for the carriage of numbers differing in typestyle, size, colour or placement to the normal requirements may be made in individual cases where the specified vehicle competed in such a visual form during the relevant group period. Approvals to such applications will be evidenced by inclusion in the logbook and Certificate of Description of photographs showing the approved style of competition number on the car.
Competitor name	Refer Advertising/Signage – page 6. Permitted - in neat, unobtrusive lettering – of the name of the competitor and/or the driver and/ or the State of their residence on the scuttle or the side of the vehicle. The total area of all such signs shall not exceed 75mm in height and 600mm in length on each side of the vehicle.
Territory of origin	Refer Advertising/Signage – page 6. The territory of origin of the driver may be shown on the vehicle. Each sign must be not larger than 100mm by 150mm and must be placed below the window line. Only two such signs are permitted.
Club badges	Refer Advertising/Signage – page 6. Club badges of an acceptable motoring club may appear on the vehicle. Each badge must be not larger than 150mm by 100mm and must be placed below the window line. Only two such badges are permitted, one on each side.
Tow Point	Refer Schedule B – Page 2.

	Where a tow point is obscured, each tow point shall be marked with the word "TOW" of a contrasting colour marking the location of each tow point.

Section 21. Roll cage/Safety cage

Requirement	Refer Safety Cage Structure – page 2. The fitment of a safety cage structure (refer Schedule I – "General Requirements for Cars and Drivers") is compulsory.
Requirement **Original Period fitted** **Type 2** **Type 3**	Refer Safety Cage Structure – page 2. The safety cage structure shall comply with Schedule J requirements (refer "General Requirements for Cars and Drivers") in all aspects save for the following: • **a Type 2 (half cage) is a minimum requirement for Group N Touring cars** and Type 2 • it is strongly recommended that a Type 3 (full cage) should be installed in a closed vehicle. Type 3 Type 3 In addition to the mounting points depicted in the Type 2 and Type 3 illustrations in Schedule J (refer "General Requirements for Cars and Drivers"), it is permitted to attach the safety cage structure to other points of the body subject to those additional attachment points being to either the front hoop or the main hoop of the safety cage structure. Such additional attachments may be by bolting or welding. For the approval process for a safety cage structure not in compliance with Schedule J please refer to Schedule J section 6 – "Certification by Motorsport Australia". – page 9
Requirement **Not Original Period fitted**	Refer Safety Cage Structure – page 2. For Groups Na, Nb and Nc not using the original period fitted and installed safety cage the lower mounting plates of the safety cage structure must be contained entirely within the cockpit (i.e., the structural inner volume which accommodates the driver and the passengers) and no component may pass through any part of the body work nor be installed in any other compartment of the vehicle. The front legs of the roll cage may pass through the dashboard adjacent to the A-pillar. The minimum amount of material may be

	removed to enable fitment. The front leg is not to be attached to the dashboard except where prior approval has been granted by Motorsport Australia. No associated components contributing to the strength of the safety cage structure may be situated outside the cockpit. In the case of a “hatchback” type of body no component of a safety cage structure may be located rearward of the upper pick-up point of the rear shock absorbers.
Side anti-intrusion bars	Refer Safety Cage Structure – page 2. Side anti-intrusion bars or other additional braces outlined in Schedule J (refer “General Requirements for Cars and Drivers”) may be fitted to the safety cage structure provided that none of these additional components passes through the bodywork.
Rear seats	Refer Safety Requirements – page 2. Rear seats may be locally modified to permit the fitment of a safety cage structure.
Exemptions	Refer Roll Bars – page 2. Effective roll bars must be fitted to all competing vehicles. Any exemption from the requirement to fit roll bars must be sought from and approved by Motorsport Australia. Refer Safety – page 2. Vehicles in all historic groups, while competing in competitions specifically limited to such vehicles and mixed category single-car speed competitions, are exempted from normal Motorsport Australia requirements in respect of rollover protection structures bars (subject to the limitations of 1.1 Safety Cages/Roll Bars) – Page 3.

Section 22. Safety Harnesses

Requirement	Refer Schedule A – Page 1. Each automobile shall, of necessity, in any competition, have a safety harness as required by Schedule I. Refer Safety Harnesses – page 18. A safety harness must be fitted to the vehicle in accordance with Schedule I (refer "General Requirements for Cars and Drivers"). Refer Schedule I – Page 1. A safety harness (including a seat belt) shall be compliant with a Standard as specified below and be fitted and worn in accordance with the manufacturer’s directions, with Tables I-1 and I-2 of this Schedule and any additional requirement imposed by specific category, group and/or supplementary regulations. Each safety harness shall comply at least with one of the Standards as specified in Table I-1 below. (Harnesses of a higher level than specified are permitted and encouraged).

TABLE I-1

	Configuration	Acceptable Standards	Identification
A	6-Point Harness	FIA 8853-2016[3] *FIA Hologram compulsory* FIA 8853/98[1] *FIA Hologram compulsory for each harness manufactured after 01/01/2013* SFI 16.1[2]	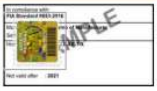
	5-Point Harness		
B	4-Point Harness	Includes Level A FIA 8854/98[1] AS 2596 ECE R16	
	3-Point Harness		
C	Lap Sash Belt	AS 2596 ECE R16 AS E35	
D	Lap Belt	AS 2596 ECE R16 AS E35	

TABLE I-2

Event Type	Event Permit Level	Type	Notes
Observed Section Trial	All	D	
Motorkhana	All	D	
Khanacross	All	C	Type B minimum for each Specials
Speed Events	All	C	Registered closed automobiles
		B	Other automobiles
		A	Where FHR is required – refer Schedule D
Races[1]- 1st Category Group 2A/2C	All	A	
Races[1] - Other automobiles	All	A	
Rally	All	A	
Rallysprint	S1	C	
	S2	A	
Other Road Events	Touring / Navigation Assemblies	C, D	Must comply with civil regulations or otherwise as required for any other sub event/s or special test/s.
	Touring Road	C, D	Must comply with civil regulations or otherwise as required for any other sub event/s or special test/s.
Off Road	All	A	

Use with Frontal Head Restraint (FHR)

Refer Schedule I – Page 1.

Each safety harness with the words “For FHR use only” which appears on each shoulder strap shall be worn only in conjunction with a FHR device.

Any international event listed on the FIA International Calendar will be subject to the safety harness standards detailed in the FIA ISC.

Important note:

(i) Some safety harnesses may not comply with the law. Where the automobile is to be driven on a public road, it is the competitor’s responsibility to ensure that it complies with the law.

(ii) A safety harness damaged in any way, including in a collision, shall be subject to inspection by a scrutineer. If appropriate, the automobile’s log book shall be endorsed with a requirement that the belt/harness be replaced.

(f) The fitment of an elastic cord and or any retention device not homologated by the FIA, which is bonded or sewn to a Safety Harness shoulder strap is not permitted.

(i) It is permitted to use a Velcro© piece or alterative to retain the shoulder strap away from the driver during a driver change, provided this does not apply a load or crush to the shoulder strap and its webbing when fitted to restrain the driver.

(ii) It is permitted to attach an elastic cord to the waist strap only. Attachment shall be to the metal buckle only.

International events

Refer Schedule I – Page 1.

	Any international event listed on the FIA International Calendar will be subject to the safety harness standards detailed in the FIA ISC. Important note: (i) Some safety harnesses may not comply with the law. Where the automobile is to be driven on a public road, it is the competitor's responsibility to ensure that it complies with the law. (ii) A safety harness damaged in any way, including in a collision, shall be subject to inspection by a scrutineer. If appropriate, the automobile's log book shall be endorsed with a requirement that the belt/harness be replaced. (f) The fitment of an elastic cord and or any retention device not homologated by the FIA, which is bonded or sewn to a Safety Harness shoulder strap is not permitted. (i) It is permitted to use a Velcro© piece or alterative to retain the shoulder strap away from the driver during a driver change, provided this does not apply a load or crush to the shoulder strap and its webbing when fitted to restrain the driver. (ii) It is permitted to attach an elastic cord to the waist strap only. Attachment shall be to the metal buckle only.
Compliance – public roads	Refer Schedule I – Page 1. Important note: Some safety harnesses may not comply with the law. Where the automobile is to be driven on a public road, it is the competitor's responsibility to ensure that it complies with the law.
Use of Elastic cord/Velcro©	Refer Schedule I – Page 1. Important note: The fitment of an elastic cord and or any retention device not homologated by the FIA, which is bonded or sewn to a Safety Harness shoulder strap is not permitted. It is permitted to use a Velcro© piece or alterative to retain the shoulder strap away from the driver during a driver change, provided this does not apply a load or crush to the shoulder strap and its webbing when fitted to restrain the driver. (It is permitted to attach an elastic cord to the waist strap only. Attachment shall be to the metal buckle only.
Damage	Refer Schedule I – Page 1. Important note: A safety harness damaged in any way, including in a collision, shall be subject to inspection by a scrutineer. If appropriate, the automobile's log book shall be endorsed with a requirement that the belt/harness be replaced.
Exemptions	Refer Safety – page 2. Vehicles in all historic groups, while competing in competitions specifically limited to such vehicles and mixed category single-car speed competitions, are exempted from normal Motorsport Australia requirements in respect of rollover protection structures bars (subject to the limitations of 1.1 Safety Cages/Roll Bars). Refer Schedule I – Page 4. For automobiles of the 5th Category whilst competing in events exclusively for the 5th Category, each safety harness shall be of a type and configuration as specified in the specific group technical regulations.

Section 23. Frontal Head Restraint

Requirement	Refer Safety Harnesses – page 18. A safety harness must be fitted to the vehicle in accordance with Schedule I (refer "General Requirements for Cars and Drivers"). Refer Schedule I – Page 1.

A safety harness (including a seat belt) shall be compliant with a Standard as specified below and be fitted and worn in accordance with the manufacturer's directions, with Tables I-1 and I-2 of this Schedule and any additional requirement imposed by specific category, group and/or supplementary regulations.
Each safety harness shall comply at least with one of the Standards as specified in Table I-1 below.
(Harnesses of a higher level than specified are permitted and encouraged).

TABLE I-1

	Configuration	Acceptable Standards	Identification
A	6-Point Harness	FIA 8853-2016[3] *FIA Hologram compulsory* FIA 8853/98[1] *FIA Hologram compulsory for each harness manufactured after 01/01/2013* SFI 16.1[2]	
	5-Point Harness		
B	4-Point Harness	Includes Level A FIA 8854/98[1] AS 2596 ECE R16	E4
	3-Point Harness		
C	Lap Sash Belt	AS 2596 ECE R16 AS E35	
D	Lap Belt	AS 2596 ECE R16 AS E35	

TABLE I-2

Event Type	Event Permit Level	Type	Notes
Observed Section Trial	All	D	
Motorkhana	All	D	
Khanacross	All	C	Type B minimum for each Specials
Speed Events	All	C	Registered closed automobiles
		B	Other automobiles
		A	Where FHR is required – refer Schedule D
Races[1]- 1st Category Group 2A/2C	All	A	
Races[1] - Other automobiles	All	A	
Rally	All	A	
Rallysprint	S1	C	
	S2	A	
Other Road Events	Touring / Navigation Assemblies	C, D	Must comply with civil regulations or otherwise as required for any other sub event/s or special test/s.
	Touring Road	C, D	Must comply with civil regulations or otherwise as required for any other sub event/s or special test/s.
Off Road	All	A	

Safety Harness Mountings

Refer Safety Harnesses – page 2.
A safety harness shall be securely mounted on at least two points (Type D), three points (Types B and C) or five points (Type A) in compliance with the prescriptions of Drawings I-1, I-2 and I-3.

Drawing I-1

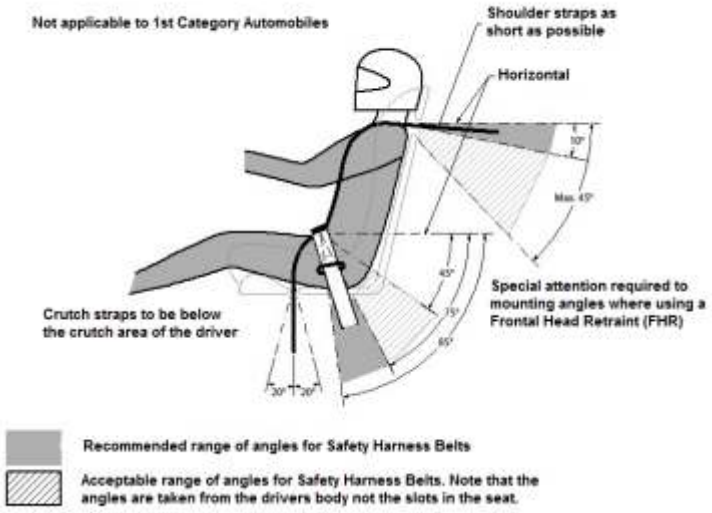

Drawing I-2

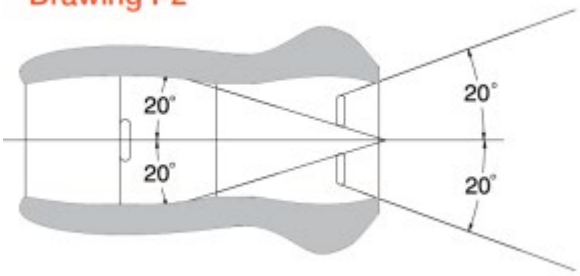

Drawing I-3

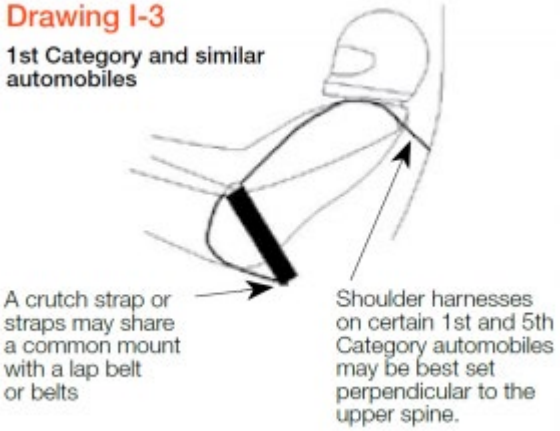

If the two shoulder straps (Types B and C) join prior to a common mounting point then that junction shall be at least 150mm behind the wearer's neck. Under no circumstances shall a safety harness mounting bolt be used to affix a safety cage to the bodyshell.

(b) A safety harness shall be installed in accordance with the manufacturer's instructions with consideration to the requirements when using a Frontal Head Restraint and application of the following:

(i) The shoulder straps shall be directed to the rear and installed in such a way that they do not make an angle greater than 45° to the horizontal from the occupant's shoulder where a frontal head restraint is not used. It is highly recommended that this angle should not exceed 10° (refer drawing I-1).

(ii) The maximum angles in relation to the centre-line of the seat are 20° divergent or convergent (refer drawing I-2). The shoulder straps may be installed crosswise symmetrically about the centre-line of the front seat mounting points for a safety harness.

(c) A safety harness shall be mounted using the following:

(i) On a series production automobile, any unmodified seat belt mounting point may be used;

(ii) Where a safety harness is affixed to an un-reinforced section of the body shell, each attachment point shall be reinforced by the use of a plate not less than 75mm x 50mm x 3mm thick (refer drawing I-4);

Drawing I-4

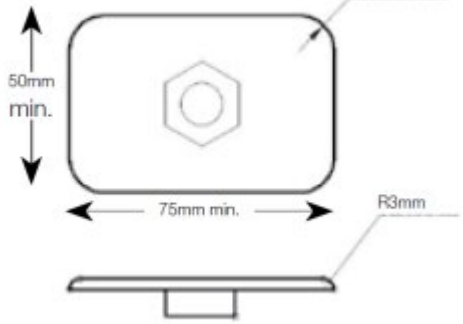

(iii) Except for a crutch strap mounted in accordance with (d) any bolt used shall be a minimum of 10mm grade 8.8, or an eye bolt to the recognised thread diameter of 7/16" or 11mm;

(iv) Shoulder straps may be fixed to the safety cage or to a reinforcement bar by means of a loop, and/or be fixed to a transverse reinforcement compliant with Schedule J and the following:

(A) When looped around a transverse bar adjustment mounting buckles are to be placed as close as possible to the bar to reduce the amount of slip of the shoulder strap mountings.

(B) It is permitted to retain a shoulder strap/s into position to maintain FHR adjustment using material such as safety cage padding.

(d) Only a crutch strap or straps may be mounted in accordance with drawing I-6 where the following shall apply:

(i) Bar/s shall not bend under a strap load of at least 14.7kN

(ii) All edges shall be appropriately rounded (>1.5mm radius)

(iii) The bars shall directly clamp on each other firmly clamping the webbing

(iv) Each attachment point shall be reinforced by the use of a plate in accordance with drawing I4 or a single plate in accordance with drawing I-5

Drawing I-5

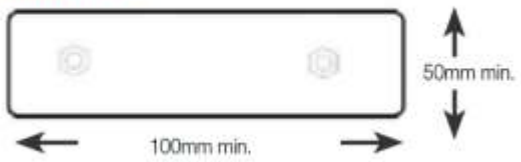

(v) The belt is correctly routed in accordance with drawing I-6

	Drawing I-6 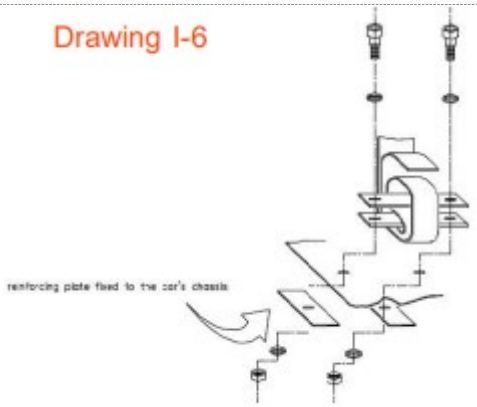
Use with Frontal Head Restraint (FHR)	Refer Schedule I – Page 1. Each safety harness with the words "For FHR use only" which appears on each shoulder strap shall be worn only in conjunction with a FHR device. Any international event listed on the FIA International Calendar will be subject to the safety harness standards detailed in the FIA ISC. Important note: (i) Some safety harnesses may not comply with the law. Where the automobile is to be driven on a public road, it is the competitor's responsibility to ensure that it complies with the law. (ii) A safety harness damaged in any way, including in a collision, shall be subject to inspection by a scrutineer. If appropriate, the automobile's log book shall be endorsed with a requirement that the belt/harness be replaced. (f) The fitment of an elastic cord and or any retention device not homologated by the FIA, which is bonded or sewn to a Safety Harness shoulder strap is not permitted. (i) It is permitted to use a Velcro© piece or alterative to retain the shoulder strap away from the driver during a driver change, provided this does not apply a load or crush to the shoulder strap and its webbing when fitted to restrain the driver. (ii) It is permitted to attach an elastic cord to the waist strap only. Attachment shall be to the metal buckle only.
Fitment of Safety Harness Mountings for Frontal Head Restraint (FHR)	Refer Schedule I – Page 4. For automobiles of the 5th Category whilst competing in events exclusively for the 5th Category, each safety harness shall be of a type and configuration as specified in the specific group technical regulations. Refer Safety Harnesses – page 2. Drawing I-9 Recommended harness placement with use with FHR 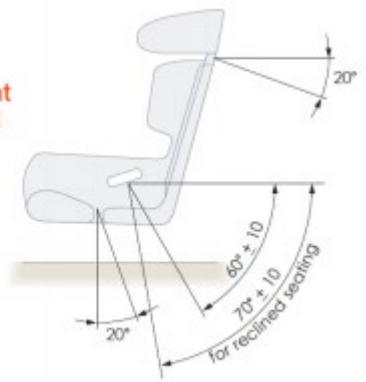 Each safety harness must be compliant with FIA or SFI standards and it is strongly recommended to use only a 6 point harness homologated to FIA standard 8853/98 or FIA standard 8853-2016. A safety harness with either a 75mm or a 50mm wide shoulder strap may be used with FHR. The following shall apply:

(i) The length adjustment device of the shoulder strap shall be positioned on the FHR yoke with the upper edge not more than 70mm from the lower edge of the FHR yoke as shown in Drawing I-7.

Drawing I-7

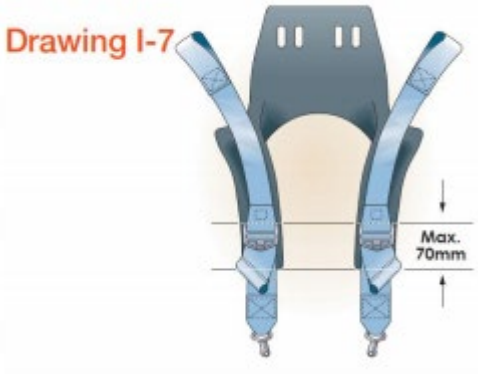

(ii) The shoulder strap anchorage points on the automobile shall be symmetrical about the centre line of the driver's seat. When viewed from above, the angle between the shoulder straps shall be approximately 20°-25° as shown in Drawing I-8.

Drawing I-8

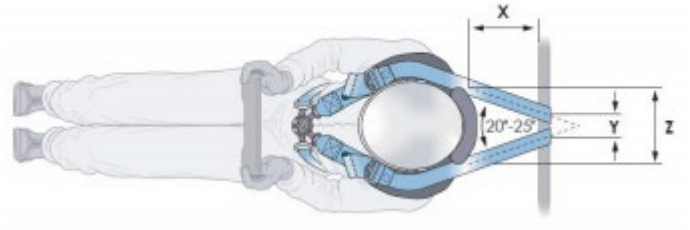

(iii) This can be achieved with reference to the values in Table I-3

TABLE I – 3

Table 1: Reference Values for 120mm FHR Collar

Z FHR COLLAR WIDTH (MM)	120							
X FHR to belt anchorage (mm)	100	200	300	400	500	600	700	800
Y belt anchorage to separation (mm)	135-(110)	95 (70)	55 (30)	15 (-10)	-25 (-50)	-65 (-90)	-105 (-130)	-145 (-170)

Table 2: Reference Values for 140mm FHR Collar

Z FHR COLLAR WIDTH (MM)	140							
X FHR to belt anchorage (mm)	100	200	300	400	500	600	700	800
Y belt anchorage to separation (mm)	155 (130)	115 (90)	75 (50)	35 (10)	-5 (-30)	-45 (-70)	-85 (-110)	-125 (-150)

Table 3: Reference Values for 160mm FHR Collar

Z FHR COLLAR WIDTH (MM)	160							
X FHR to belt anchorage (mm)	100	200	300	400	500	600	700	800
Y belt anchorage to separation (mm)	175 (150)	135 (110)	95 (70)	55 (30)	15 (-10)	-25 (-50)	-65 (-90)	-105 (-130)

Table 4: Reference Values for 180mm FHR Collar

Z FHR COLLAR WIDTH (MM)	180							
X FHR to belt anchorage (mm)	100	200	300	400	500	600	700	800
Y belt anchorage to separation (mm)	195 (170)	155 (130)	115 (90)	75 (50)	35 (10)	-5 (-30)	-45 (-70)	-85 (-110)

Definitions for the reference values:
- dimension Z (mm) = width of the FHR collar, as shown in Drawing I-8 and I-10
- dimension X (mm) = distance from the rear edge of the FHR-belt-bearing-surface to the automobile attachment point (mm) as shown in Drawing I-8
- dimension Y (mm) = separation of the centres of the two shoulder straps at the automobile attachment points (mm) as shown in Drawing I-8

Values calculated based on 75mm wide straps (values for 50mm wide straps are shown in brackets)
Values in ORANGE colour denote that theoretical separation is less than belt width. In this case it is recommended that the belts are installed side by side to avoid any overlap, hence the actual separation shall be equal to the belt width. If the value is negative, the belt straps should be crossed.
NOTE: Shoulder straps over 200mm long are permitted but not recommended.

which have been calculated based on 75mm wide belts (values for 50mm wide belts are shown in brackets) and four FHR collar sizes according to Drawing I-10.

	Drawing I-10 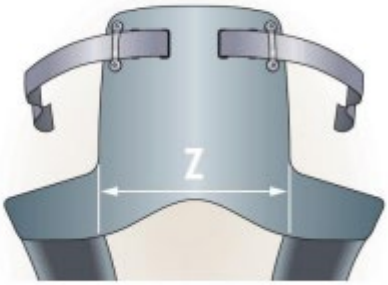 (iv) Negative values indicate that the shoulder straps are crossed. These values should be closely respected, but a tolerance of +/- 20 mm would be acceptable. Strap movement in the anchorages should be taken into account. (iv) The values in red (underlined) denote that theoretical separation is less than strap width. In this case it is recommended that the straps are installed side by side to avoid any overlap, hence the actual separation shall be equal to the strap width. If the value is negative, the strap should be crossed. Shoulder straps over 200mm long are not recommended.

Section 24. Window Nets

Requirement	Refer Schedule I – Page 3. Each 5th Category automobile, when competing in an event exclusively for such an automobile, is exempt from the requirement for Window Nets. Group N is sometimes combined in races with non-historic categories, and in such cases, the dispensations granted in relation to safety for historic racing no longer apply. Cars must be fitted with the safety items applying to the relevant category and level of the event. Potentially this could include, but is not necessarily limited to, items such as “full” roll cages and window nets. Refer Schedule I – Page 2. In a circuit race, each closed automobile which is required to have a safety window net fitted in the driver’s door window opening. (i) The window net must cover the opening forward to the centre of the steering wheel and be able to withstand a load of 500N applied at any point. (ii) The net may be locally modified to preserve the driver’s view of the external mirror. (iii) The net must be affixed by means of a rapid release system so that, even with the automobile inverted it must be possible to detach the mechanism with one hand. (iv) The handle or lever must have coloured markings. (v) A push button release system is authorised provided that it respects the prescriptions of this article. The push button must be visible from the outside, be of a contrasting colour and be marked “press”. Refer Schedule I – Pages 2 and 3. Each automobile in a circuit race shall, of necessity, be fitted with a window net as required by Schedule I. Refer Safety Requirements – Page 2

Section 25. Rain Lights

Requirement	Refer to Safety - page 2. Vehicles in all historic groups, while competing in competitions specifically limited to such vehicles and mixed category single-car

	speed competitions, are exempted from normal Motorsport Australia requirements in respect of safety rain lights (strongly recommended in compliance with Schedule C). Refer to Schedule C - page 2. Each automobile in a circuit race shall, of necessity, also be required to be fitted with a rearward facing red warning lamp (rain light) which must be clearly visible from the rear and mounted not more than 100mm from the centreline of the automobile. Each lamp must: (i) be of at least 15 watts or an LED lamp with FIA and/or Motorsport Australia approval may be used and may strobe; (ii) have a minimum surface area of 20cm2 and a maximum surface area of 140cm2; and (iii) be able to be switched on by the driver when normally seated in the automobile.

Section 26. Seats

Seats **Driver's seat**	Refer to Interior - page 4. The original driver's seat may be replaced by a seat meeting the requirements of Schedule C (refer "General Requirements for Cars and Drivers") and the seat style illustrations set out in "Seats for Groups Na, Nb, Nc, Sa, Sb and Sc List", provided it is the product of a commercially recognised aftermarket seat manufacturer. Refer to Vehicle Eligibility- 5th Category – Historic - Seats Motorsport Australia does not maintain lists of specifically-approved seats for these groups. The following are guidelines only, and should be read in conjunction with Schedule C, (refer "General Requirements for Cars and Drivers" in the Motorsport Australia Manual), and the general regulations for Groups N and S as may be applicable. It should be noted that, at all times, seats should be, both in style, trim and colour, such as to reflect the period of racing being portrayed by the relative group. It is mandatory that seats with integral headrests should have seat belt slots to ensure proper location of the shoulder and lap straps. Where a separate headrest is used with standard seats, the headrest must be is supported on the same structure as the seat and must not be able to be moved independently. Refer to Schedule C Each automobile in a circuit race shall, of necessity, in addition to the provisions of Schedules A and B, be fitted only with such replacement seat which in a closed automobile first registered with Motorsport Australia after 1 January 1980, and in which the relevant regulations permit the replacement of the driver's seat and which: (i) incorporates a head restraint; and (ii) does not incorporate adjustment of the rake of the squab. NOTE: The use of a seat to the FIA 8862-2009 Advanced Racing Seat standard is recommended. Where a seat to this standard is required, the seat shall be used with the seat mount bearing the same FIA homologation number unless an alternative seat mount has been homologated by Motorsport Australia, in which case that seat mount may be used with a seat mount/support fixed as per the following: (i) Where an automobile is in compliance with the Australian Design Rules (ADR) for seat mountings, on the anchorage points for fixing seats used on the original automobile; or

	(ii) On anchorage points for fixing seats in conformity with Drawing C-1; or DRAWING C-1 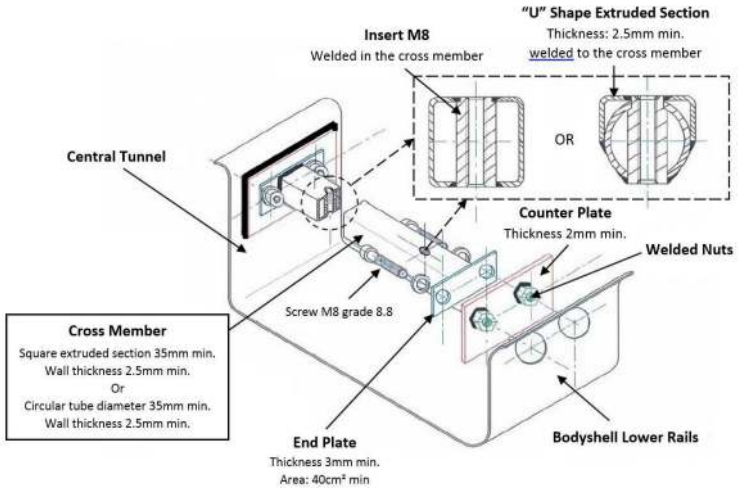 (iii) Where a seat is affixed to an un-reinforced section of the floor pan, each attachment point shall be reinforced by the use of a plate of not less than 40cm². The minimum thickness of each support and counterplate shall be 3 mm for steel and 5 mm for light alloy material. A seat mount/support must be attached to the shell/chassis using at least 4 mounting points per seat using 8.8 grade bolts with a minimum diameter of 8mm with counterplates, in compliance with Drawing C-2. DRAWING C-2 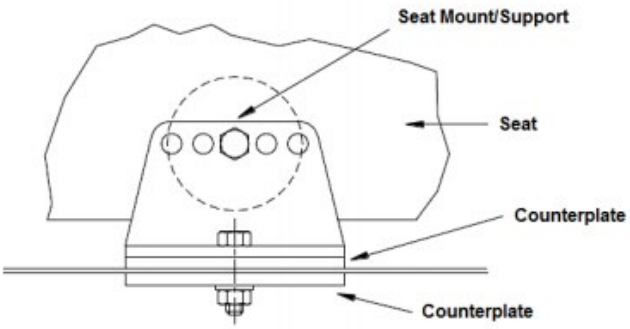 An anchorage point for fixing a seat may be in compliance with Drawing C-1. A cross member may be welded in place instead of fixing by bolts providing the connection is fully welded around the circumference.
Seats **Passenger's seat**	Refer to Interior - page 4. It is permissible also to replace the passenger seat with a seat of similar specification in size, style, appearance, colour and trim to the replacement driver's seat.
Seats **Rear seat**	Refer to Interior - page 4. The original rear seats must be retained in all respects, including location, save where varied in 5th Category, Vehicle Eligibility – Historic Sports. Refer Safety Requirements – page 2. Rear seats may be locally modified to permit the fitment of a safety cage structure. Refer General – Page 2. A rear set may be folded down.
International events	Refer to Interior - page 4. In the case of events listed on the FIA International calendar, the replacement seat must also carry FIA approval

Section 27. Interior

Requirement	Refer to Interior - page 2. Unless otherwise specified, all original interior trim and fittings as supplied by the manufacturer for the model in question must be in place.
Floor coverings	Refer to Interior - page 2. Floor coverings may be removed. Insulating materials may be added.
Trim	Refer to Interior - page 2. Where the original trim has deteriorated, restoration is permitted and encouraged, but should be as near as practicable to original specifications. Refer General – Page 2. complete parts of upholstery or trim shall not be removed, however the interior trim and dashboard may be modified locally (e.g. by cutting or distorting) in order to fit a safety cage structure

Section 28. Steering Wheel

Replacement	Refer to Interior - page 2. The steering wheel may be replaced, provided that the replacement wheel is not less than 320mm diameter, unless the original wheel was of a lesser diameter, in which case a replacement of at least equal diameter to the original is acceptable.

Section 29. Instruments and Switches

Requirement	Refer to Interior - page 2. Original instruments and switches may be replaced, provided that they are replaced by items compatible in face, style and size with the other instruments.
Additional instruments	Refer to Interior - page 2. Additional instruments/equipment of compatible style may be fitted into a separate panel.
Tachometer **Engine revolution speed limiters**	Refer Engine Revolution Speed Limiters Page 6. Electronic engine RPM limiters are permitted in all groups, but only limiters that are separate from and not part of a tachometer and that perform no other function. Refer Electronic Components Electronic rev limiter (in tacho) – not permitted.
Tachometer **Additional**	Refer Interior Page 4. An additional tachometer may be fitted provided the glass face does not exceed 105mm in diameter, the unit does not provide any other electrical function and only mechanical types of maximum rev indicator are permitted. Refer Electronic Components Electronic tacho (period appearance) – permitted.

Section 30. Gearchange light/Shift light

Requirement	Not permitted

Section 31. Engine revolution speed limiter

Requirement	Refer to Engine Revolution Speed Limiters – Page 6. Electronic engine RPM limiters are permitted in all groups, but only limiters that are separate from and not part of a tachometer and that perform no other function. Refer to Comments - page 3.
Location	This rev limiter must be mounted in a visible, easily accessible position in the engine bay. The operation of this MSD Soft Touch rev limiter will be subject to tests at race meetings.

Engine revolution speed limiters	Refer Engine Revolution Speed Limiters Page 6. Electronic engine RPM limiters are permitted in all groups, but only limiters that are separate from and not part of a tachometer and that perform no other function. Refer Electronic Components Electronic rev limiter (separate) – permitted.
Engine revolution speed limiters **In tachometer**	Refer Engine Revolution Speed Limiters Page 6. Electronic engine RPM limiters are permitted in all groups, but only limiters that are separate from and not part of a tachometer and that perform no other function. Refer Electronic Components Electronic rev limiter (in tacho) – not permitted.

Section 32. Heaters

Requirement	Refer to Interior - page 2. Heaters must remain in place unless the particular model of the vehicle in question was available from the manufacturer without a heater fitted. Heater cores may be removed. Heater hoses are optional.
Cores and Hoses	Refer to Interior - page 2. Heater cores may be removed. Heater hoses are optional.

Section 33. Fire Extinguisher

Fire extinguisher **Requirement**	Refer General – Page 1. Each automobile in any competition other than Non-Speed or Race events, except where noted in specific Group/category/class regulations, must be equipped with a fire extinguisher which complies with the following conditions. HAND-HELD FIRE EXTINGUISHERS: a. Each hand-held fire extinguisher shall be secured using a metal bracket attached to the automobile with only high tensile bolts or equivalent fasteners and/or sufficient clamp/s and must remain restrained under a deceleration or acceleration of 25g; and b. Must be capable of removal by the driver (or crew, where applicable) while seated in their normal respective position for competition with safety harness unfastened, unless varied by specific category regulations and without the aid of tools. Refer Safety Equipment - page 4. All vehicles must be equipped with a fire extinguisher that complies with Schedule H – Fire Extinguishers (refer "General Requirements for Cars and Drivers") of at least 900g capacity. Refer Schedule B – Page 1 Each automobile shall, of necessity, in any speed event or race be fitted with a fire extinguisher compliant with Schedule H.
Fire extinguisher **Service**	Refer Service and Inspection – Page 1 Each AS1841 standard fire extinguisher shall be serviced every three years in accordance with AS1851 for a fire extinguisher in an adverse operating environment. If the extinguisher is compliant with another acceptable standard, it shall be serviced every two years. This servicing shall be undertaken in accordance with the procedures laid out by the manufacturer and/or the relevant standard (e.g. AS1851 for AS1841 extinguishers) and shall include a hydrostatic pressure test of the extinguisher body. A report from the servicing agent shall be supplied to a scrutineer on demand as proof of a service being completed. A service tag shall not be accepted as proof of the extinguisher having been serviced. Each fire extinguisher which is homologated by the FIA shall be serviced either by the manufacturer or their agent no more than two years after either the date of filling or the date of the last service.

	This servicing shall be undertaken in accordance with the procedures laid out by the manufacturer and/or the relevant standard and shall include a hydrostatic pressure test of the extinguisher body.
Fire extinguisher system Exemption	Refer Safety – Page 2 Vehicles in all historic groups, while competing in competitions specifically limited to such vehicles and mixed category single-car speed competitions, are exempted from normal Motorsport Australia requirements in respect of fire extinguishing systems (but not fire extinguishers – refer Schedule H, "General Requirements for Cars and Drivers" in the Motorsport Australia Manual)

Section 34. Towing Point

Requirement	Refer Safety – Page 2 Vehicles in all historic groups, while competing in competitions specifically limited to such vehicles and mixed category single-car speed competitions, are exempted from normal Motorsport Australia requirements in respect of towing eyes. Refer Schedule B – Page 2. Each automobile shall, of necessity, in any speed event or race be fitted with a visible towing point (capable of accepting a 40mm OD cylindrical test object) fitted forward of the front axle and rearward of the rear axle and capable of towing the automobile on a sealed surface with its wheels locked. Where a tow point is obscured, each tow point shall be marked with the word "TOW" of a contrasting colour marking the location of each tow point. A road registered series production automobile fitted with any unmodified original equipment tow point shall be exempt from these requirements, save for the requirement to identify an obscured front and/or rear tow point.